4. Battery System Overview

4.1. Battery System Description

The Battery-Box Premium LVS is used as a connected battery for the intermediate storage of excess PV energy in an inverter system.

It works together with Battery-Box Premium LV BMU-IP55 (BMU). The parameters and instruction of BMU could be read on our websites. The battery system could support the backup function of inverters and is compatible with both 1 and 3 phase inverters.

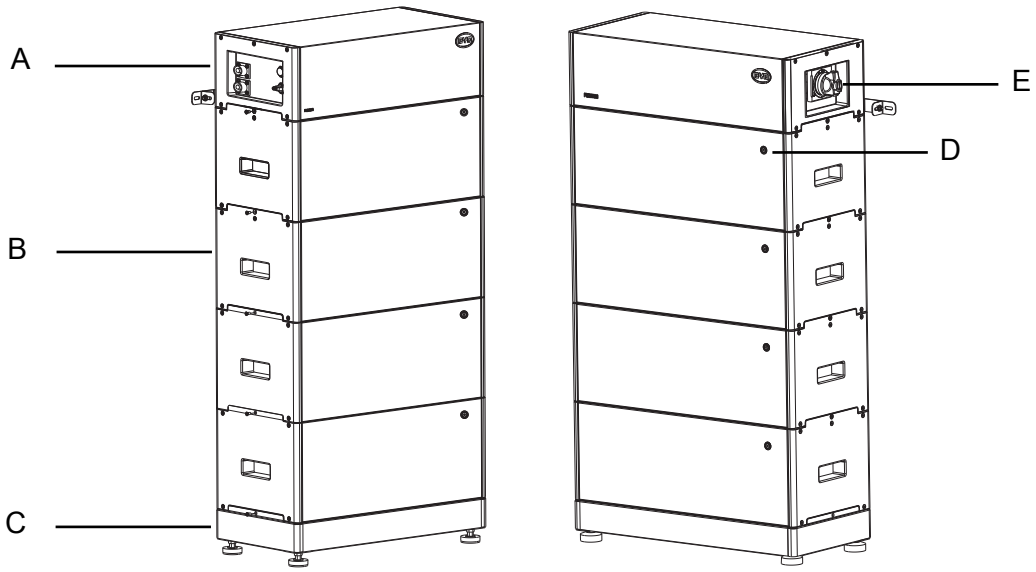

A	PDU (the normal one without the air switch, but the one for Australia market has an air switch)
B	Battery module
C	Base
D	Button with LED
E	Air switch (only available for Australia market)

One tower could be made up by one to six battery modules. **HOWEVER, WHEN BATTERY TOWERS ARE IN PARALLEL CONNECTION, UP TO FOUR BATTERY MODULES COULD BE INSTALLED AT EACH TOWER,** and up to 16 towers could be connected in parallel.

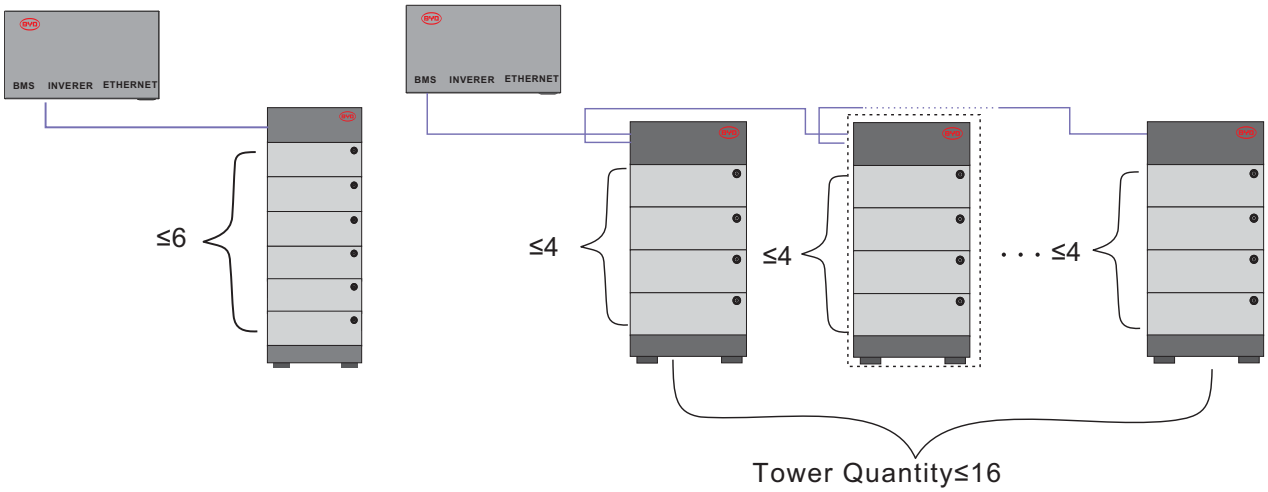

4.2. Interface

WLAN

BMU is equipped with a WLAN interface as a standard.

Be Connect

Be Connect is an app for Android and iOS system devices. You can download it from Google Play or App Store. Search Be Connect or scan the QR code on this document cover.

With Be Connect, you can update the firmware, configure and read the information of the battery system.

Be Connect Plus

Be Connect Plus is a PC app. You can download from our website (https://www.bydbatterybox.com/downloads).

With Be Connect, you can configure and diagnose the battery system, read the general battery information, update the firmware, etc.

Be Connect Monitoring

BMU is equipped with an Ethernet interface as a standard. When your battery system accesses the Internet, it will join our Be Connect Monitoring, which is a platform for BYD to provide remote service to customers. It can diagnose your battery system, and update the firmware. It is highly recommended you to access your system to the Internet.

4.3. Symbols on the System

Symbol	Explanation
	Observe the documents Observe all documents supplied with the system.
	Grounding conductor This symbol indicates the position for connecting a grounding conductor.

4. Take a battery module from the package out. Put one battery module on the base. Pay attention to the direction of the module to make sure that the blind-mating connectors of the module and the base are at the same side.

5. Repeat the operations for other battery modules.

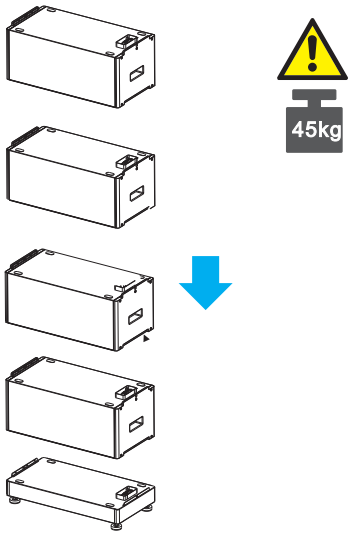

6. Install the hanger (PDU part) to the PDU. To do this, insert the screws (M5x14) through the hole on the PDU using a cylinder screwdriver (8 mm) and tighten them (torque: 5.5 Nm).

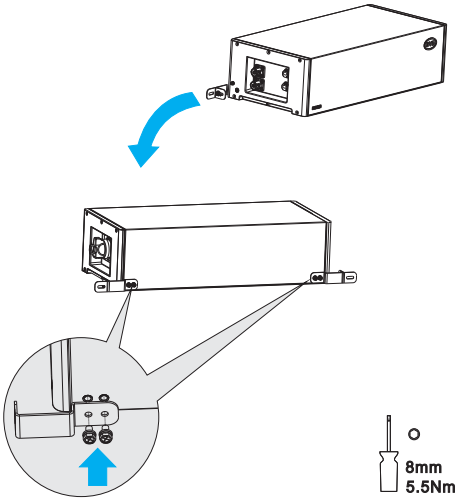

7. Put the PDU on top of the battery modules.

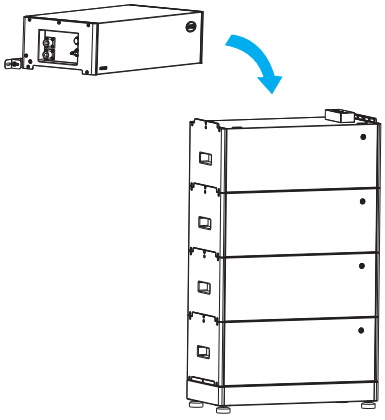

8. Fix the connection between the battery module and the base, between battery modules, and between PDU and battery module. To do this, insert the screws (M4x14) through the holes on them, using a Phillips screwdriver (PH2) and tighten them (torque: 2 Nm).

9. Hold the hanger (wall part) where it intends to be mounted on the wall and mark the position of the drill holes. Please pay attention that there may be power cables or other supply lines (e.g., gas or water) routed inside of the wall. Ensure that no lines are laid in the wall, which could be damaged when drilling holes.

10. Set the hanger aside and drill the marked holes.

11. Insert screw anchors into the drill holes if the support surface requires them.

12. Secure the hanger using screws (recommended M8x40).

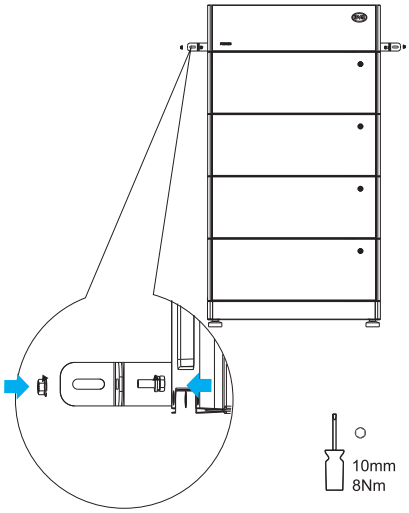

13. Fix the two hangers (wall part and PDU part) with M6X16 bolts and nuts, using a cylinder screwdriver (10 mm) to tighten it (torque: 8 Nm).

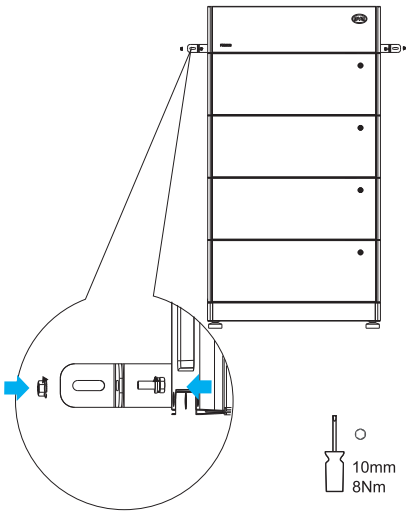

14. Mark the product type.

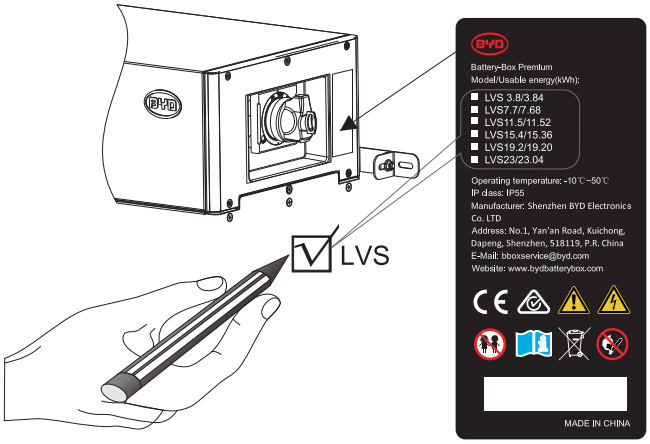

6. Electrical Connection

6.1. Overview of the Connection Area

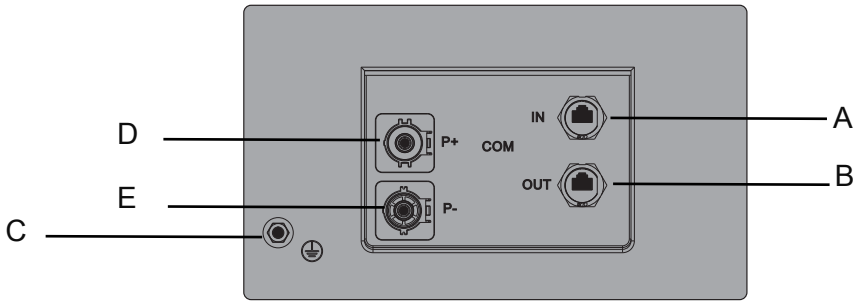

A	IN	Gland for data cable in
B	OUT	Gland for data cable out/terminal resistor
C	PE	Grounding point
D	P+	Gland for DC+ (P+)
E	P-	Gland for DC- (P-)

6.2. Connection Diagram

6.2.1. One Tower

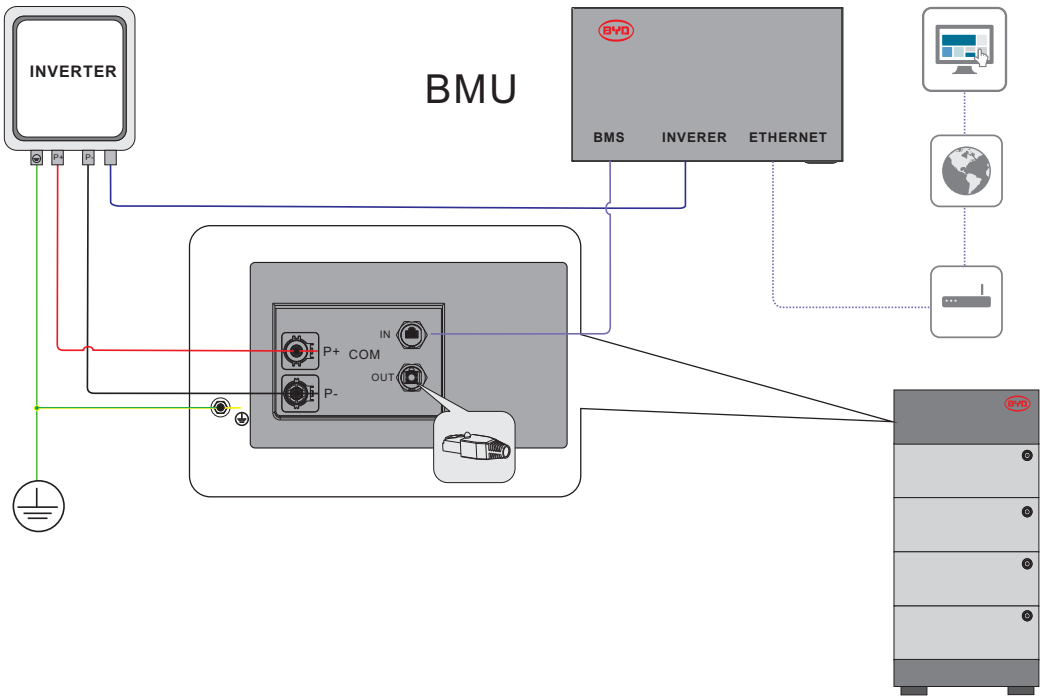

The connection to Ethernet cable is recommended, not compulsory.

6.2.2. Multiple Towers

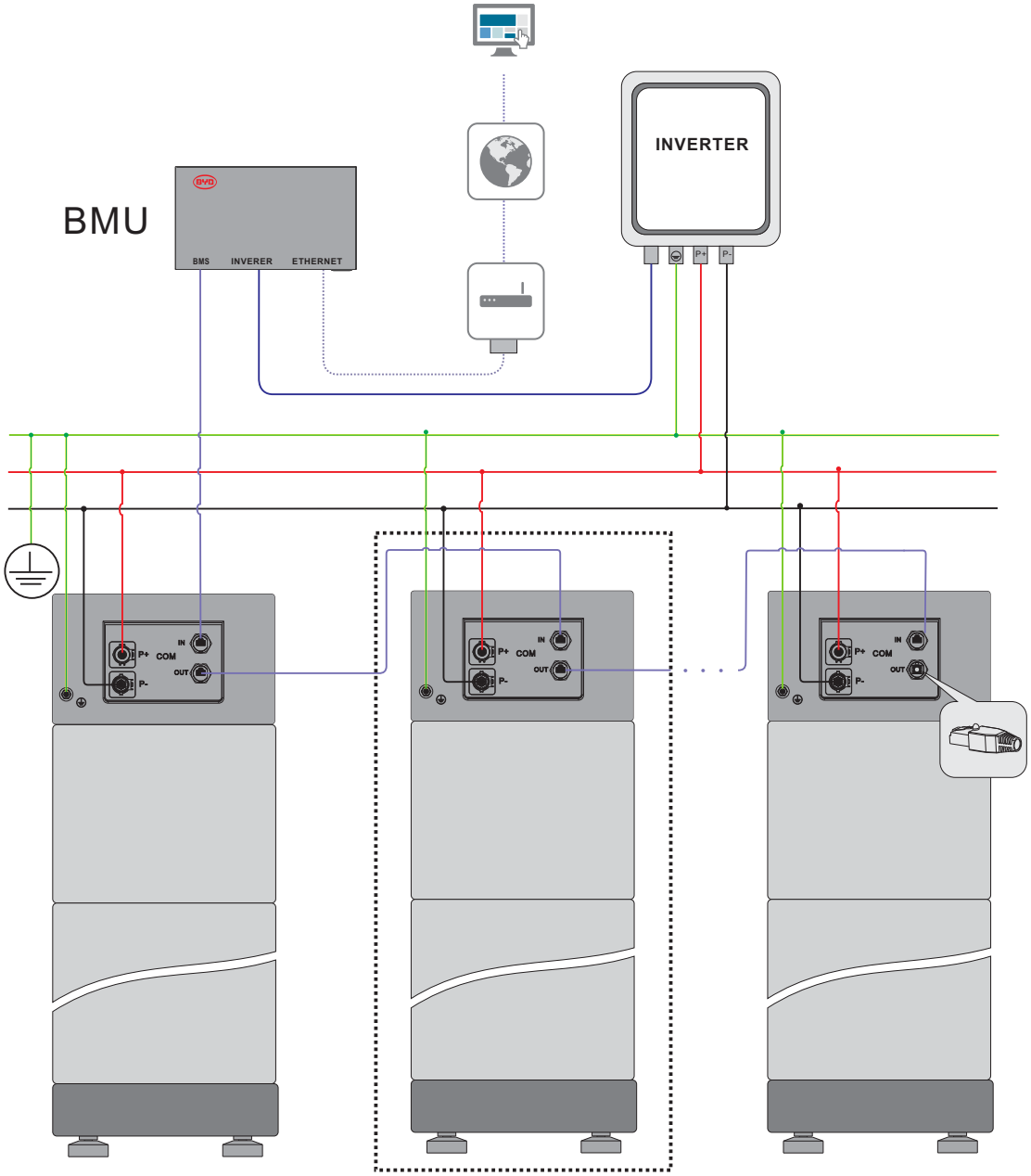

6.3. Connecting the PE

⚠ QUALIFIED PERSON

Additionally required mounting material (not included in the scope of delivery):

Additionally required mounting material (not included in the scope of delivery):

PE with Terminal (SC16-5)

PE and Terminal Requirement

a) Terminal SC16-5

b) Minimum terminal cross-section: 10 mm²

2. Install rubber core, O-Ring and cap in sequence on the DC cable.

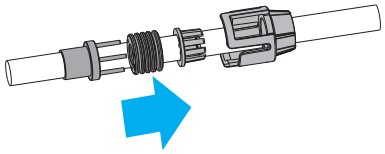

3. Strip the PE insulation sleeve up to 20 ± 1.0 mm

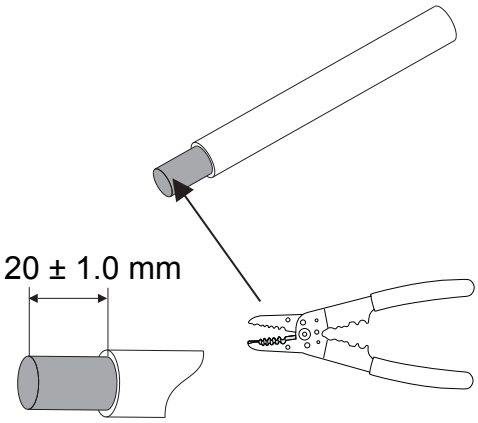

4. Plug the DC terminal into the stripped part of the cable.

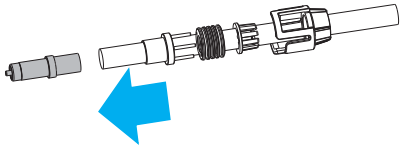

5. Clamp the metal terminal with a clamper. Before that, please make sure the correct dies are chosen.

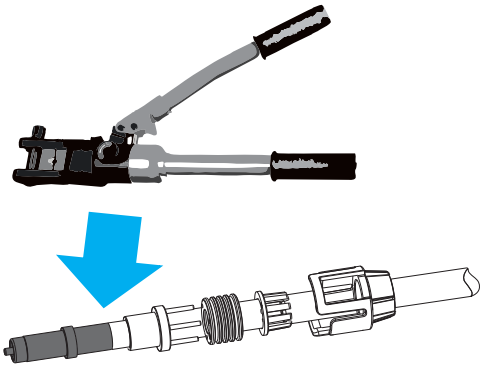

6. Plug the metal terminal into the connector.

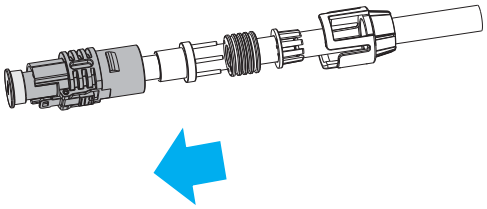

7. Plug the branches of the rubber core to the holes of O-ring.

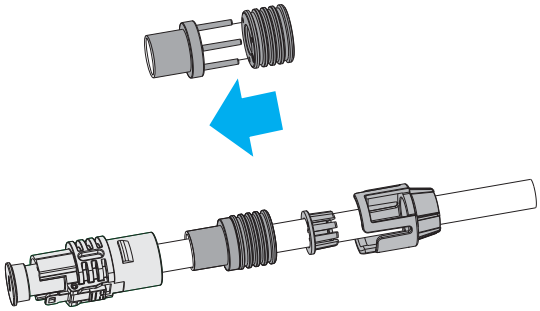

8. Push the integrated part rubber core and O-ring into the connector, and make sure that the O-ring is totally inside of the connector.

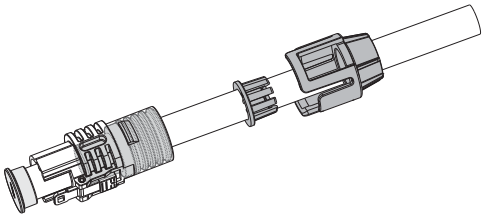

9. Push the cap to make sure the cap and the connector clutched well.

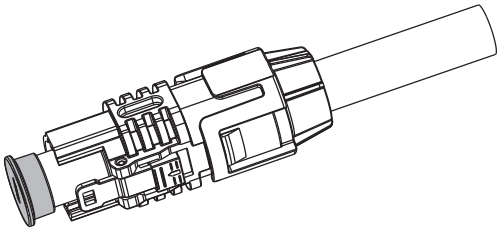

10. Remove the protective covers on the connectors and the PDU.

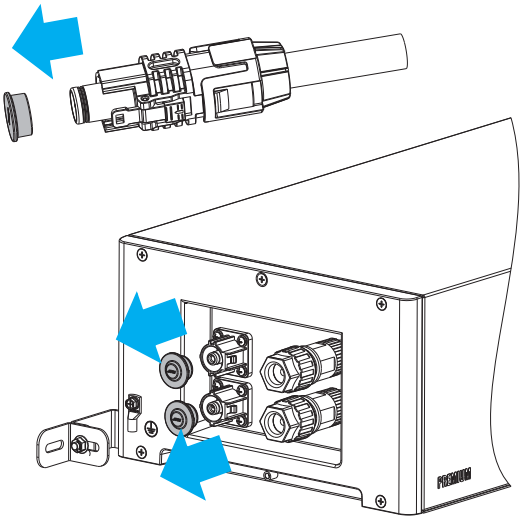

11. Plug the cables into the PDU. The other side of the cables should be well protected if it is not installed at this step.

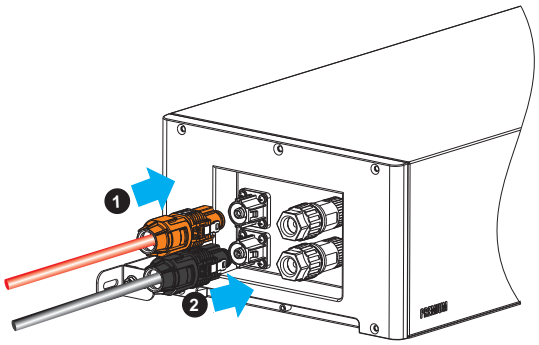

12. When you want to unplug the connectors, press the lock on it, push the lock forward a little bit, and then pull it out.

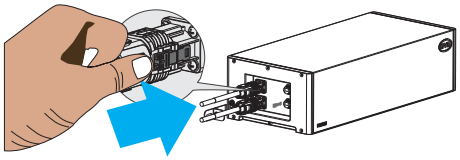

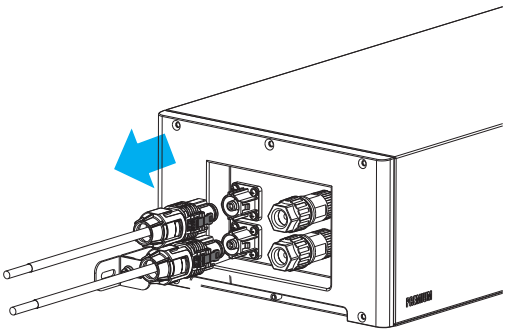

7. Commissioning

7.1. Switch on the Battery System

⚠ QUALIFIED PERSON

Requirements:

- The power cable connection between the battery system and the inverter is switched off.
- The inverter must be correctly mounted.
- All cables must be correctly connected.

Procedure:

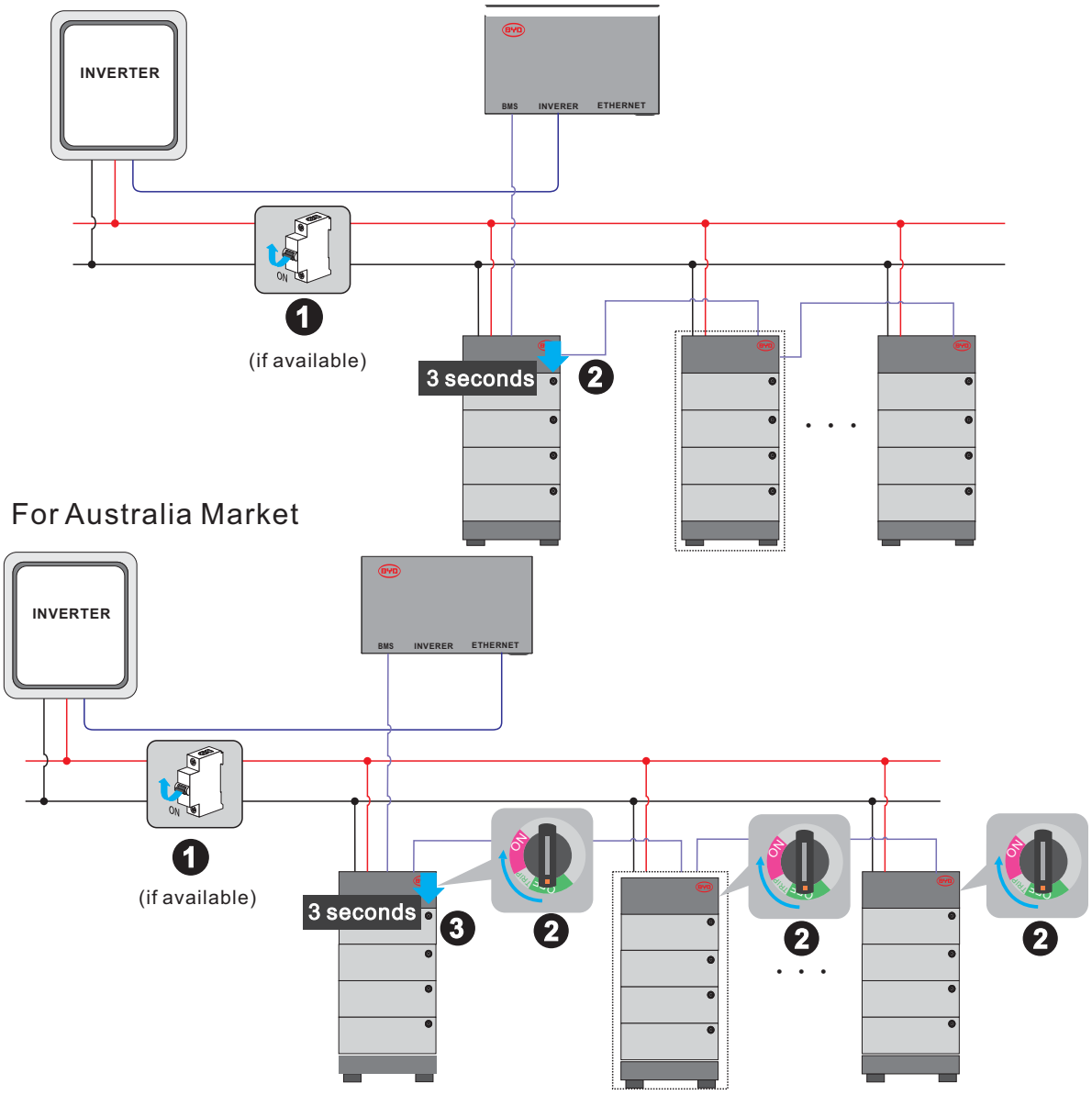

1. Switch on the air switch between the battery and inverter if there is any.
2. Switch on the air switch. (this only applies for the Australia market)
3. Press the LED button on the of the top battery module of the first tower. The LED starts to flash 0.5s white and 0.5s blue alternatively. On the condition that the BMU is well connected, it will change to solid white or blinking white later. For other cases, please refer to Chapter 11.